GARAVENTA LIFT
Creating An Accessible World

Garaventa Wheelchair Lifts

GSL ARTIRA

Inclined platform lift for straight and turning stairways







The GSL Artira is the state-of-the-art successor to the renowned Garaventa GSL-1 inclined platform lift. Combining proven Garaventa durability and design flexibility with sleek new styling, more safety features and an innovative, user-friendly control system, the GSL Artira continues Garaventa's tradition of industry leadership.

www.garaventa.ca

Why Choose the GSL Artira?

The GSL Artira inclined platform lift provides an advanced access solution for straight, turning or radiating stairways. The attractively styled platform travels along guide rails mounted to the inside or outside of the stairway. Design flexibility allows for extensive customization of the GSL Artira.

With over 30 years of expertise and over 15,000 Stair-Lift installations around the globe, Garaventa provides building owners with innovative accessibility solutions. Our design teams have taken on the most challenging situations and developed unique access solutions for a wide variety of public and private buildings. The GSL Artira reflects our experience.



Where can the GSL Artira be installed?

Suitable for indoor or outdoor applications, the GSL Artira can be installed in schools, places of worship, offices, hotels, airports, subways, libraries, museums, stadiums and private residences.

Design Versatility of the GSL Artira

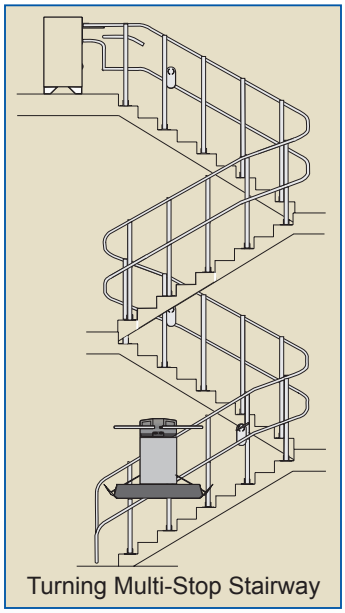

Turning Multi-Stop Stairway

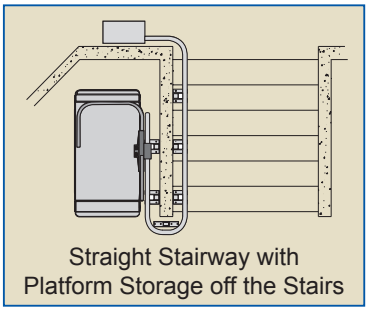

Straight Stairway with Platform Storage off the Stairs

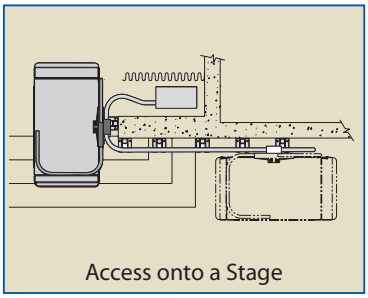

Access onto a Stage

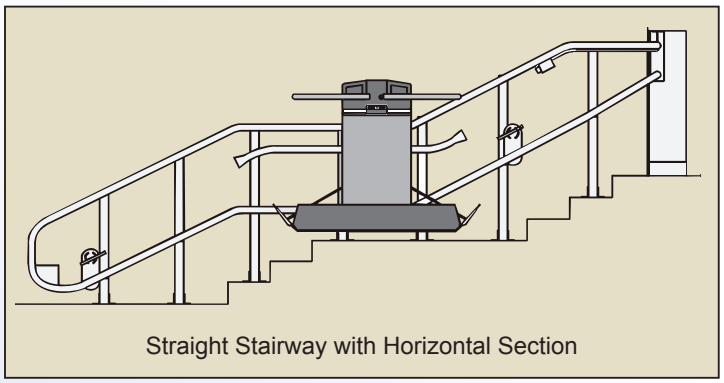

Straight Stairway with Horizontal Section

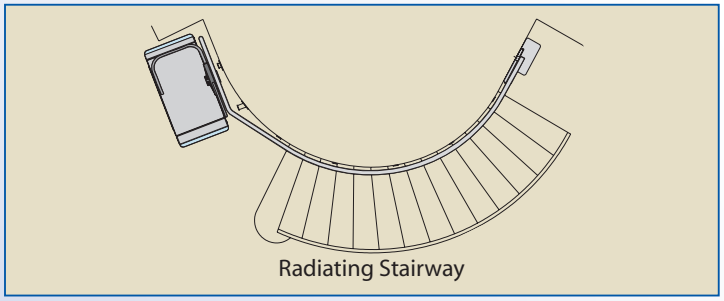

Radiating Stairway

Standard Features

- 250kg (550lb) capacity with a 5x safety factor
- Large ADA compliant platform
- Powerful 2 HP drive utilizes mains power
- Keyed Call Stations with Smart-Lite Technology™
- Call station controls automatically fold and unfold the curved safety arms, platform and ramps
- Curved safety arms surround the passenger
- Pedestrian safety lights on the platform
- Keyless platform for easier operation
- Platform controls include two large illuminated directional buttons and an Emergency Stop Button
- Platform slows prior to the corners and features a smooth start and stop when approaching or leaving the landing area
- Platform sensing detects obstructions
- Emergency manual lowering and folding
- Bi-directional ramp sensing

Optional Features

- Compact Drive System occupies minimal space
- Variety of platform sizes to fit all stairways
- Attendant remote control
- Keyed platform operation for additional security
- Auto-fold option keeps stairway clear
- Side load platform for confined lower landings
- Fold-down seat with seat belt
- Dek-Lite (only available with fold-down seat)
- Optional RAL colors or stainless steel finish
- Integrated Pedestrian Handrails
- Pedestrian Audio Visual Alert (wall mount)
- Building fire alarm integration
- Outdoor weatherproofing package
- Auxiliary power system (battery powered)
- Platform can be remotely folded
- Vandal resistant platform lock (electric)
- Higher speed 9m/min (30ft/min)
- Outdoor cover
- Side of hanger optical sensing

Garaventa developed the GSL Artira based on our many years of experience in the lift industry and with concern for passenger and pedestrian safety. The Artira's state-of-the-art technology provides robustness, reliability, quiet operation, user friendliness and enhanced safety.



Smart-Lite Technology™ – Garaventa's design engineers set out to make the Artira the world's easiest-to-operate inclined platform lift. The result is Smart-Lite Technology™, a computer-based lift control system that intuitively guides the user through the operating sequence by illuminating the appropriate button to push. Control buttons are large, bright, graphically clear and give an audible "beep" when pushed. Fold and unfold functions are fully automated and work with a simple momentary push of the illuminated button.



Enhanced Safety – Passenger and pedestrian safety is assured by under-platform sensors (1) that stop the platform if it encounters an obstruction. Unique to the Artira are bright amber Pedestrian Safety Lights (2) located at either end of the platform deck. These flashing lights alert pedestrians to the presence of the platform in the stairway, and illuminate the platform threshold for safer boarding. Bi-Directional Ramp Sensing (3) detects obstructions on the stairs and prevents a wheelchair from being off-center on the platform deck.



Curved Safety Arms – The Artira's curved safety arms further enhance passenger safety during platform boarding and while travelling on the stairway. Located above and around the platform perimeter for maximum usable space, Artira's safety arm design accommodates even large wheelchairs. The Artira's safety arms have fully automated operation and sophisticated electronic obstruction sensing.



Compact and Vandal-Resistant Platform Storage – With its remote drive system, the Artira has the most compact folded platform in the industry, leaving maximum clear space on the stairs and landings. When folded, the Artira's platform conceals and protects the folded safety arms and platform controls. For further vandal resistance in public buildings such as schools, a robust electric Platform Security Lock can be fitted.



Ultra-Quiet Drive with PCC™ System – The Artira's new Ultra-Quiet Drive is located in a locked drive box away from the platform and uses a solid state inverter to drive a silent yet powerful 2 horsepower electric motor. All you hear is the whisper of the inverter fan, similar to that of a computer. The Programmable Configuration Controller (PCC™) allows the Artira to be customized for each stairway application, including slowing at corners and landings, automatic folding, building fire alarm integration and many other sophisticated capabilities.

GSL ARTIRA - Inclined Platform Lift

Need Design Assistance? Call your local Garaventa Lift representative or our Design Hotline at 1-800-663-6556

Genesis Vertical Lift



- Enclosure and Shaftway Models
- For lifting heights of up to 4343mm (171")
- Choice of Hydraulic or Leadscrew Drive Systems
- Indoor or outdoor applications

Free Inclined Platform Lifts DVD

Learn about how they work, key features, and the benefits offered. To order, contact your local dealer or visit our web site.

Architects!

Many resources are available at www.garaventa.ca

- Design Specifications
- Spec-Wizard
- CAD Blocks
- Design and Planning Guides
- Photo Gallery

Garaventa Lift

PO Box 1769,
Blaine, WA 98231-1769
7505 134A Street, Surrey, BC
Canada V3W 7B3

Phone: +1 604 594-0422
Toll Free: 1-800-663-6556
Fax: +1 604 594-9915

Email: productinfo@garaventa.ca
Web site: www.garaventa.ca
Global Portal: www.garaventalift.com

©2008 Garaventa Lift. As we are continuously improving our products, specifications outlined in this brochure are subject to change without notice.

Printed in Canada
15814-E-PB

Turning Clearances

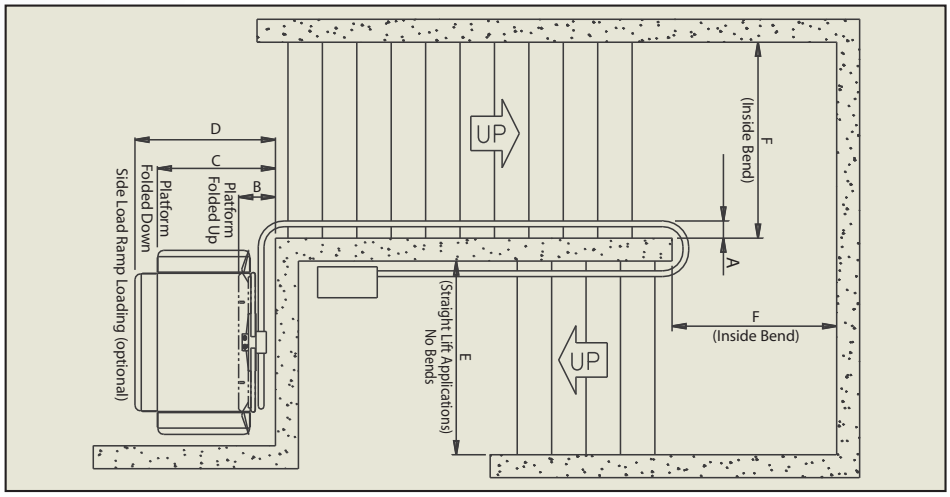

Dim.	Attachment Method	ADA Size 800 x 1220 mm (31 1/2" x 48")		Other Platform Sizes 800 x 1050 mm (31 1/2" x 41 3/8")		800 x 900 mm (31 1/2 x 35 3/8")		700 x 750 mm (27 1/2" x 29 1/2")	
		mm	in	mm	in	mm	in	mm	in
A	Direct Mount	125	4 7/8	125	4 7/8	125	4 7/8	125	4 7/8
	Tower Mount	150	5 7/8	150	5 7/8	150	5 7/8	150	5 7/8
B	Direct Mount	320	12 5/8	320	12 5/8	320	12 5/8	330	13
	Tower Mount	345	13 5/8	345	13 5/8	345	13 5/8	355	14
C	Direct Mount	1015	40	1015	40	1015	40	900	35 3/8
	Tower Mount	1040	41	1040	41	1040	41	925	36 3/8
D	Direct Mount	1230	48 3/8	1230	48 3/8	1230	48 3/8	1115	44
	Tower Mount	1255	49 3/8	1255	49 3/8	1255	49 3/8	1140	45
E	Direct Mount	1035	40 3/4	1035	40 3/4	1035	40 3/4	920	36 1/4
	Tower Mount	1060	41 3/4	1060	41 3/4	1060	41 3/4	945	37 1/4
F	Direct Mount	1225	48 1/4	1185	46 5/8	1145	45 1/8	1025	40 3/8
	Tower Mount	1250	49 1/4	1210	47 5/8	1170	46 1/8	1050	41 3/8

Technical Information

Platform: Large ADA compliant, mid-size, compact and residential sizes.

Rated Load: 250 kg (550 lbs)

Speed: 6 m/min (20 ft/min), slowing prior to corners and when approaching or departing landings. Optional 9m/min (30ft/min).

Drive System: 2 HP Drive Box (Roped Sprocket Drive), located at the upper landing. Optional Compact Drive system available.

Power Requirements: The mains power requirement for both drive systems is 208-240 VAC, 50/60 Hz on a dedicated circuit (North America = 20 Amp / International = 16 Amp). Auxiliary power system available.

Finishes: Durable electrostatically applied and baked textured satin grey paint. Stainless Steel finish and custom RAL colors are optional.

Curved Safety Arms: Fully automatic safety arms are located 948mm (37 3/8") above the platform deck.

Pedestrian Safety Lights: Illuminated amber tube lighting located at both ends of the platform deck.

Call Station Operating Controls (standard): Keyed with constant pressure switches, 24VDC, equipped with Garaventa Smart-Lite Technology™.

Platform Operating Controls (standard): Keyless with constant pressure directional switches, 24VDC, equipped with Emergency Stop Switch.

Overspeed Safety: Located at the bottom of the tube assembly. Contains mechanical overspeed sensor and brake, with electrical drive cut-out protection.

GARAVENTA LIFT
www.garaventa.ca

Authorized Garaventa Lift Representative